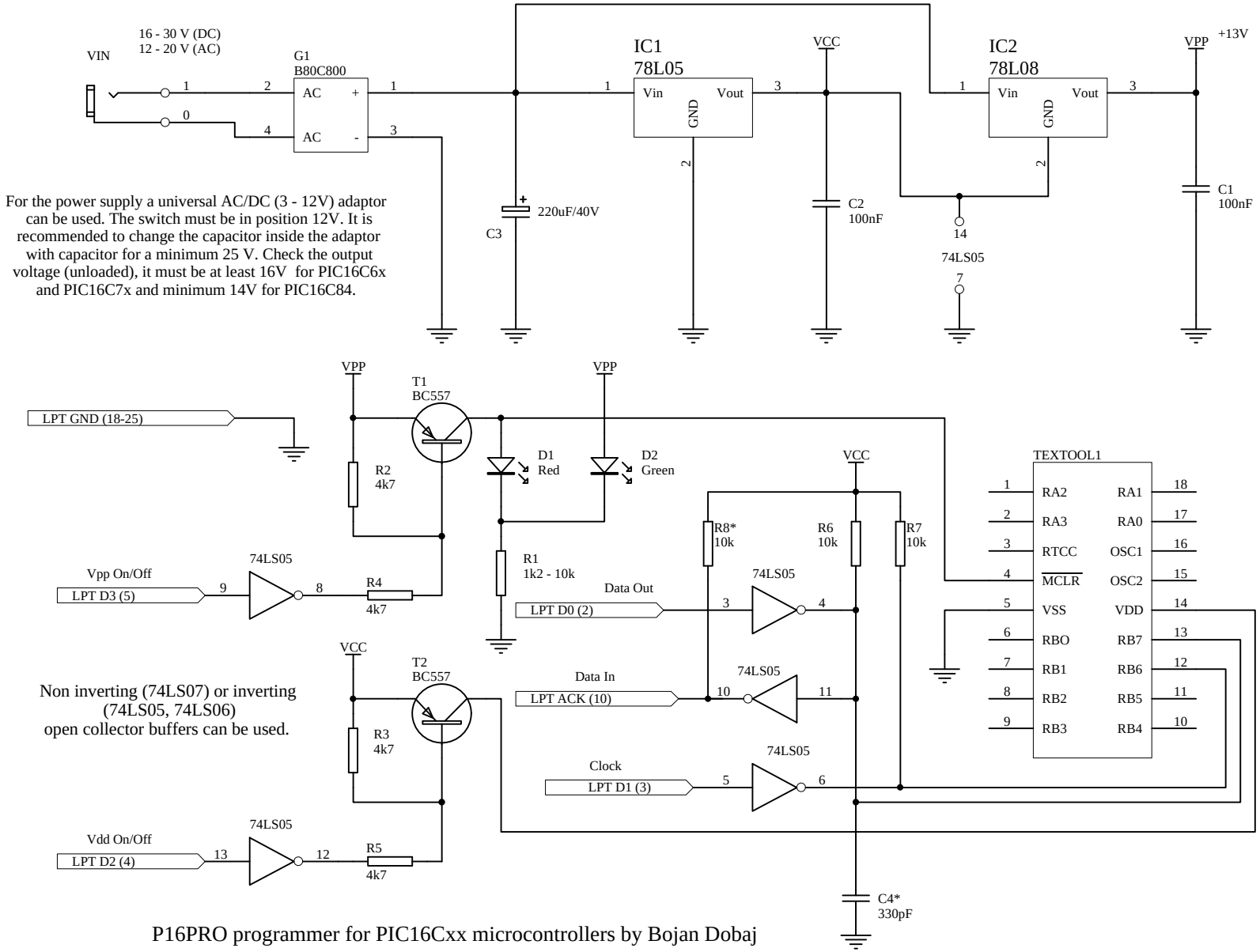

P16PRO programmer for PIC16Cxx microcontrollers by Bojan Dobaj

Text